An Explicit Knowledge-Embedded Space Mapping Scheme for Design of LTCC RF Passive Circuits

Ke-Li Wu, Michael Ehlert and Chris Barratt

Abstract -- An explicit knowledge embedded Space Mapping (SM) optimization scheme is presented. The scheme generalizes the implementation of the efficient SM technique by introducing a buffer knowledge space between the coarse model space and the fine model space. Therefore, this generic scheme can map the coarse model space to the fine model space of different physical content through the embedded knowledge space, which is built up with either CAD formulas or extracted models. The emphasis of the applications will be focused on the design of LTCC RF passive circuits, along with the required CAD formulas (knowledge) for typical embedded multilayer passives. The effectiveness of the proposed new scheme is demonstrated through a number of design examples such as band pass filters for wireless applications. The detailed procedure and flowchart of the proposed scheme will also be discussed.

An Explicit Knowledge-Embedded Space Mapping Scheme for Design of LTCC RF Passive Circuits

Ke-Li Wu *

Dept. of Electronic Eng.,
The Chinese University of Hong Kong, Hong Kong, PRC
klwu@ee.cuhk.edu.hk

Michael Ehlert
Chris Barratt

LTCC Division, National Semiconductor Corp, Irvine CA, USA
Michael.Ehlert@nsc.com
Chris.Barratt@nsc.com

Challenges in Designing LTCC Passives:

- Good physical intuition and sense of engineering that lead to initial layout designs
- Fully 3-D multi-layer structures carrying horizontal and vertical currents
- Accurate & fast EM simulation tools to count for both capacitive and inductive couplings
- Efficient design methodologies

Aggressive Space Mapping: A Brief Review

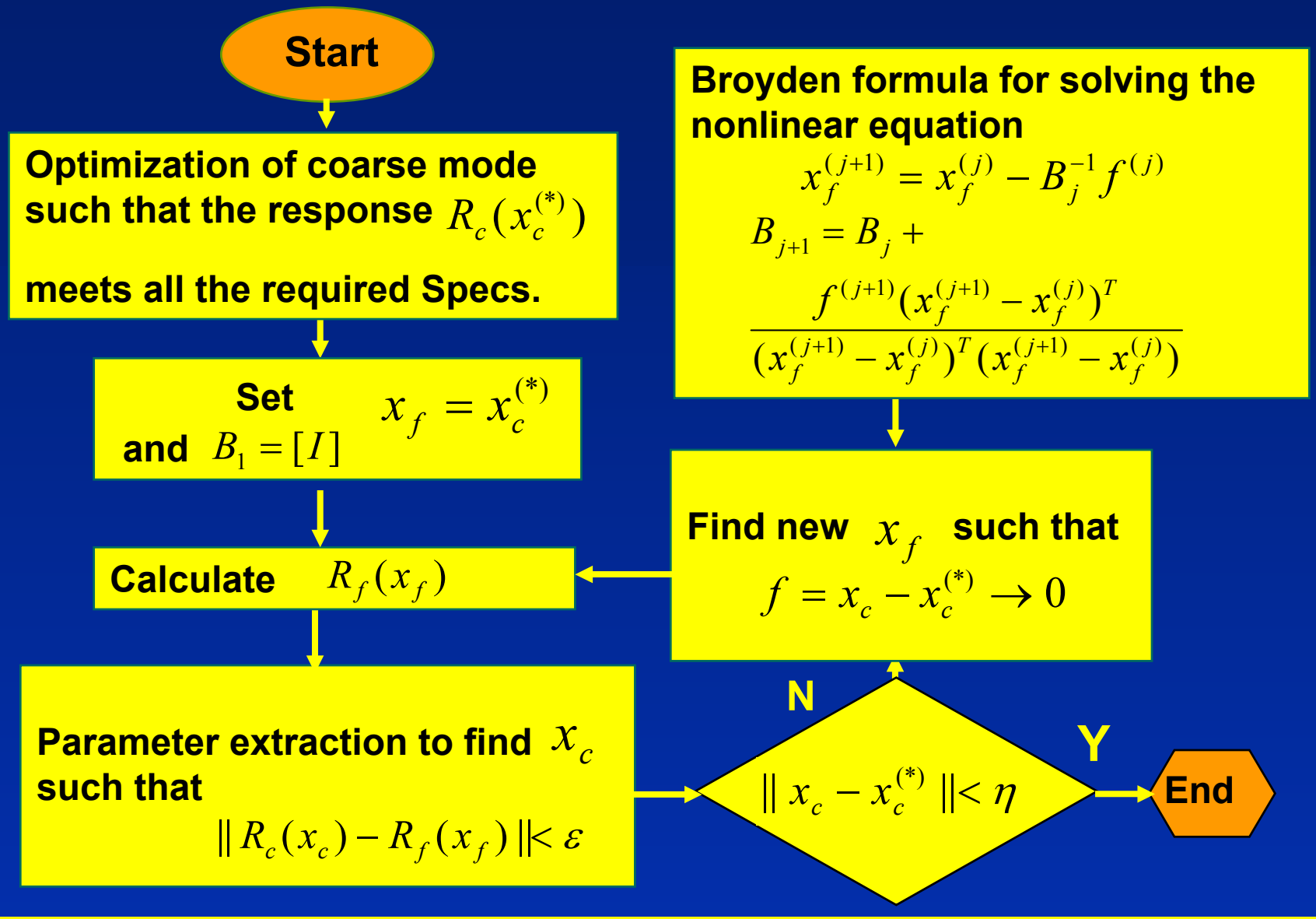

Difficulties of Applying ASM to LTCC:

- Coarse model has to be with the same ingredients as those of the fine model (L,C model vs. Physical model)
- Number of variables in coarse model has to be the same as that of the fine model
- Coarse and fine mesh scheme is not applicable for LTCC electric small circuits

Simulated Response vs. mesh size:

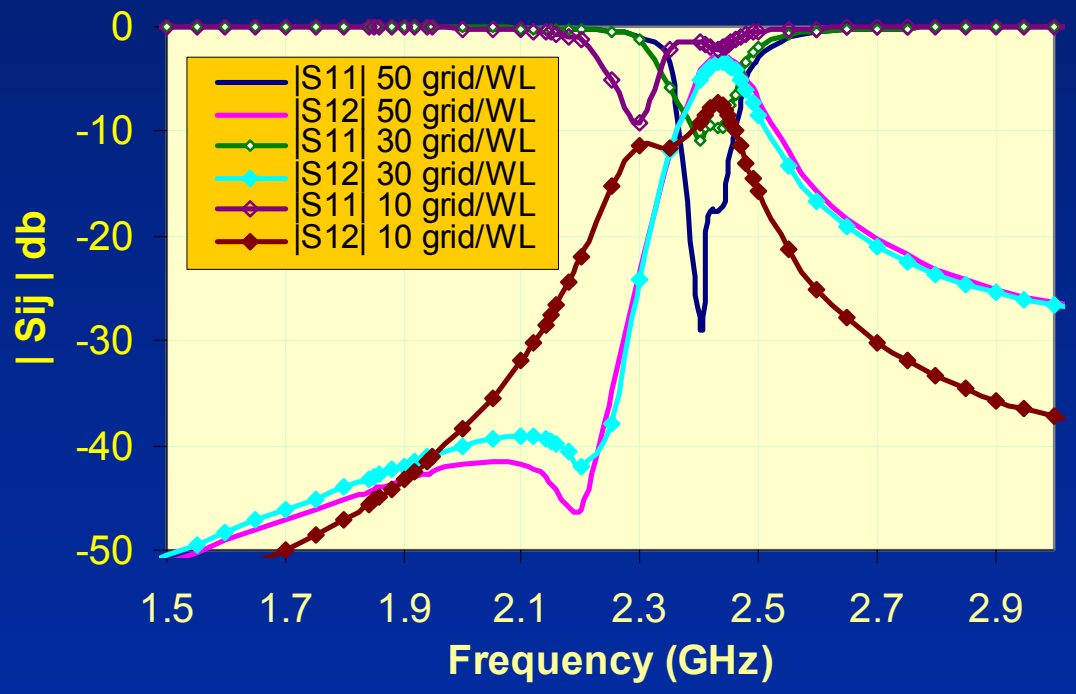

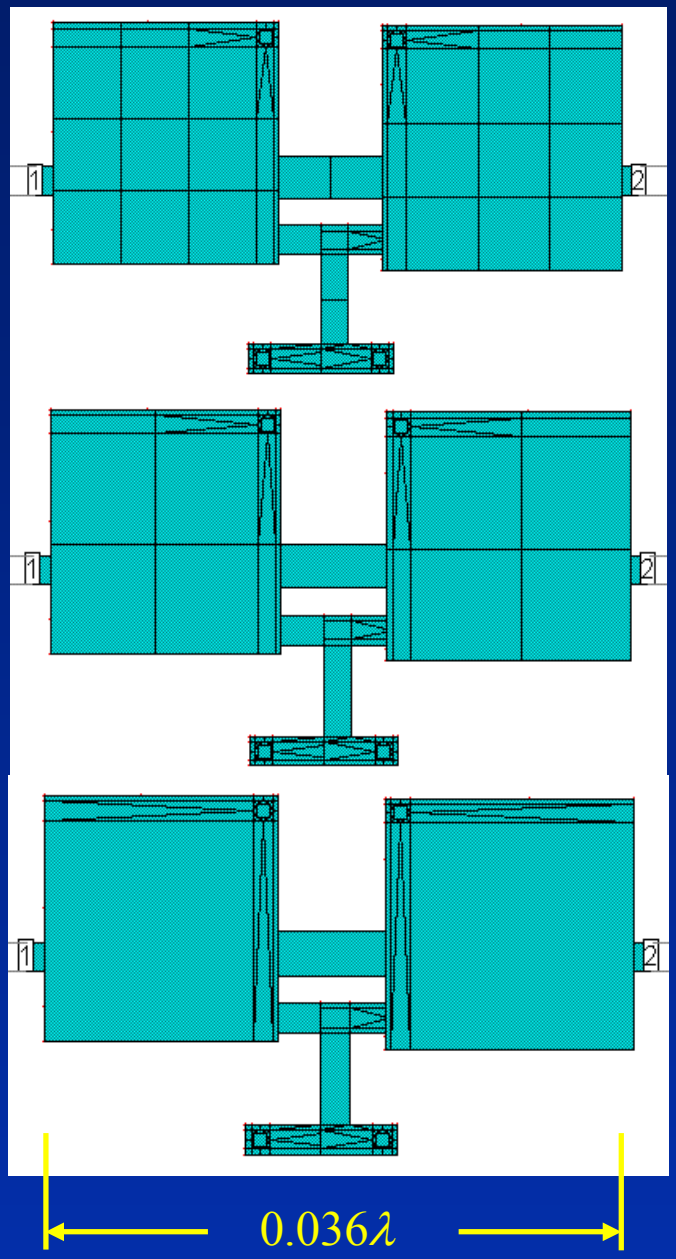

Knowledge Embedded Space Mapping :

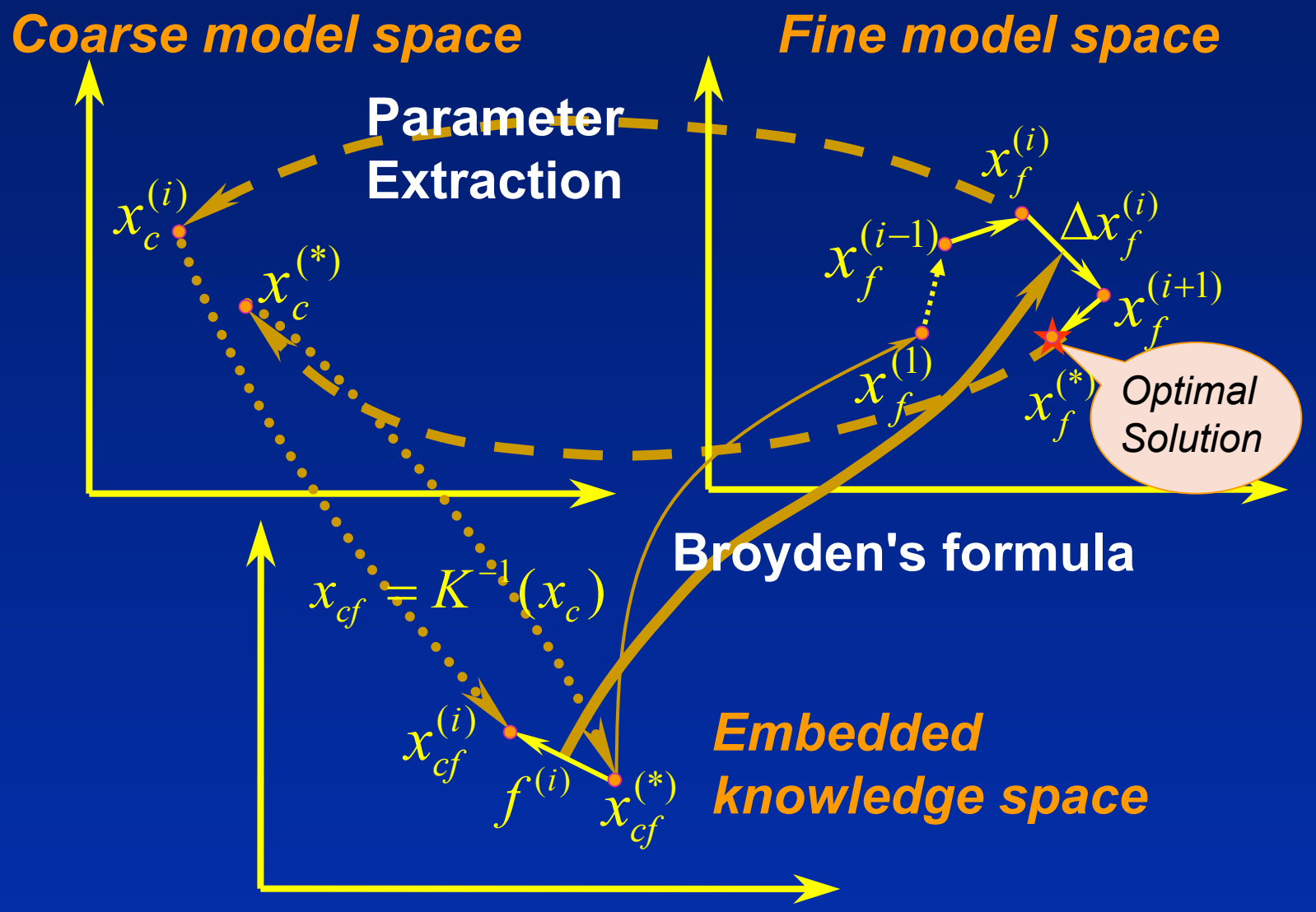

Knowledge Embedded Space Mapping :

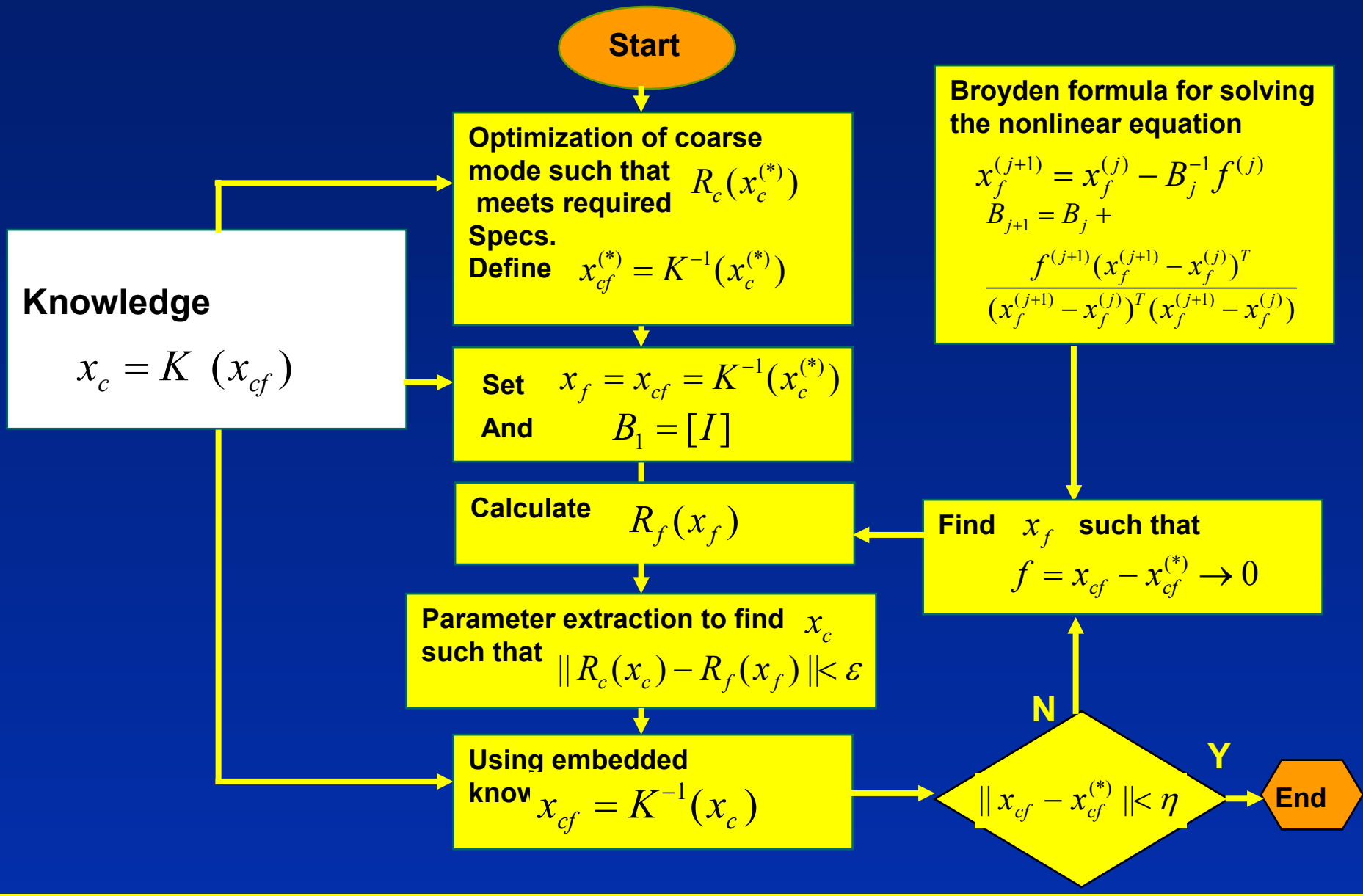

Knowledge for LTCC Design:

- Neumann's Inductance Formula

$$M = \frac{\mu}{4\pi} \cdot \frac{1}{ad} \left[\left[\frac{x^2 - P^2}{2} z \ln\left(z + \sqrt{x^2 + P^2 + z^2}\right) + \frac{z^2 - P^2}{2} x \ln\left(x + \sqrt{x^2 + P^2 + z^2}\right) - \frac{1}{6}\left(x^2 - 2P^2 + z^2\right)\sqrt{x^2 + P^2 + z^2} - xPz \tan^{-1} \frac{xz}{P\sqrt{x^2 + P^2 + z^2}} \right]_{E+d-a,E}^{E-a,E+d} (x) \Bigg]_{l_3+l_2-l_1,l_3}^{l_3-l_1,l_3+l_2} (z)$$

where $\left[[f(x,z)] \begin{matrix} q_1,q_3 \\ (x) \\ q_2,q_4 \end{matrix} \right]_{s_2,s_4}^{s_1,s_3} (z) \equiv \sum_{i=1}^{4} \sum_{k=1}^{4} (-1)^{i+k} f(q_i, s_k)$

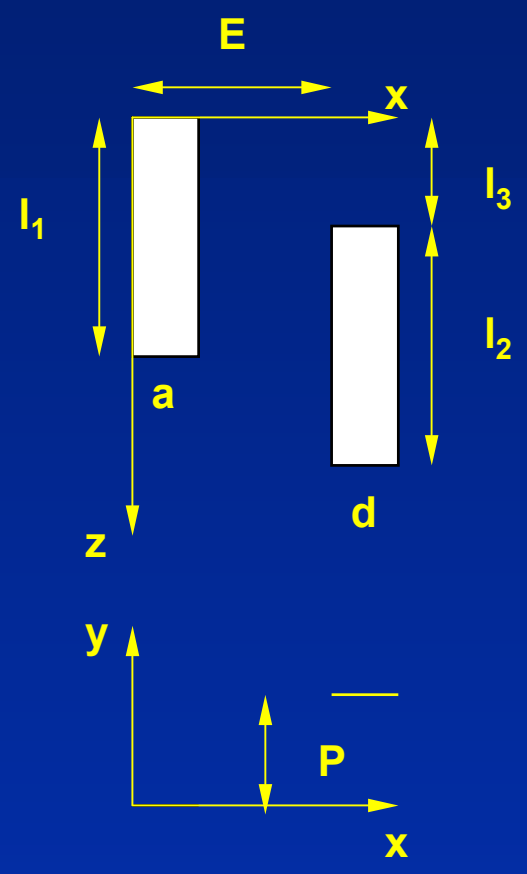

Knowledge for LTCC Design (cont.):

- Mutual inductance between two strips with a bottom ground plane

$$M_{total} = M(P,\cdots) - M(P_{image},\cdots)$$

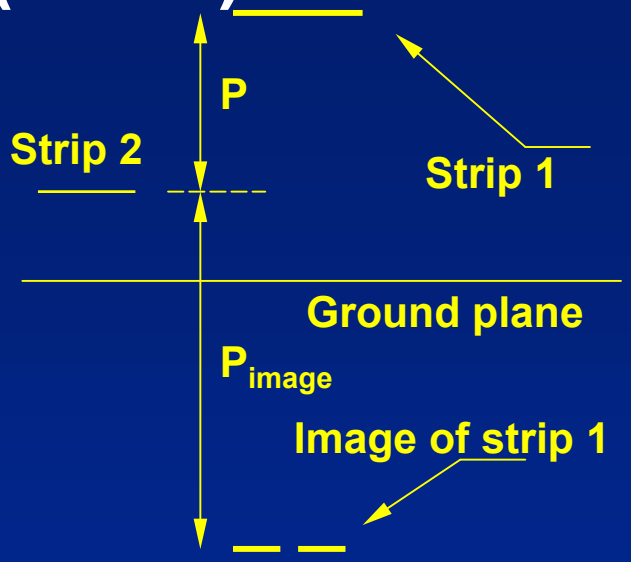

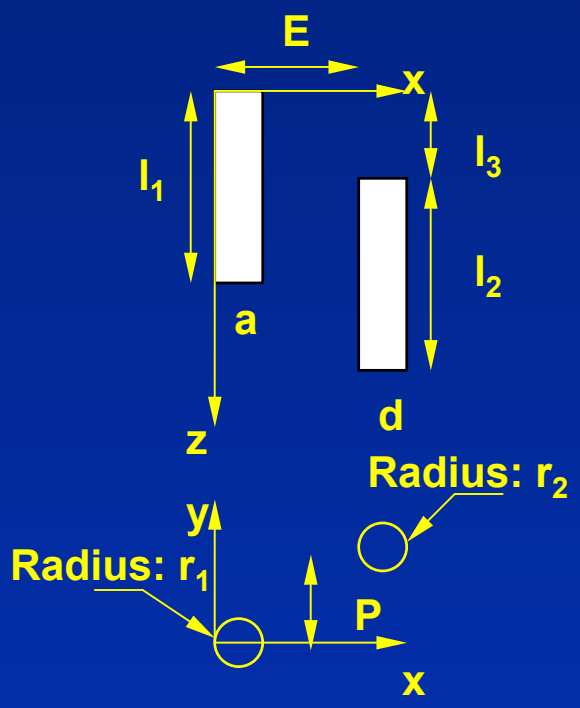

- inductance for via holes

$$M_{via} = \frac{\mu}{4\pi}\int_{P-r_2}^{P+r_2}\int_{-r_1}^{r_1} ad \cdot M(P,\cdots)dy_1 dy_2$$

Knowledge for LTCC Design (cont.):

- A spiral inductor above ground plane

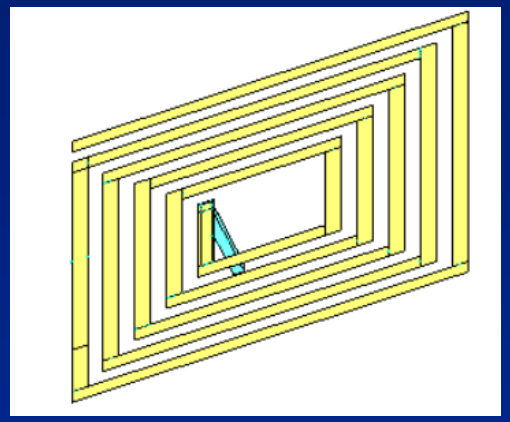

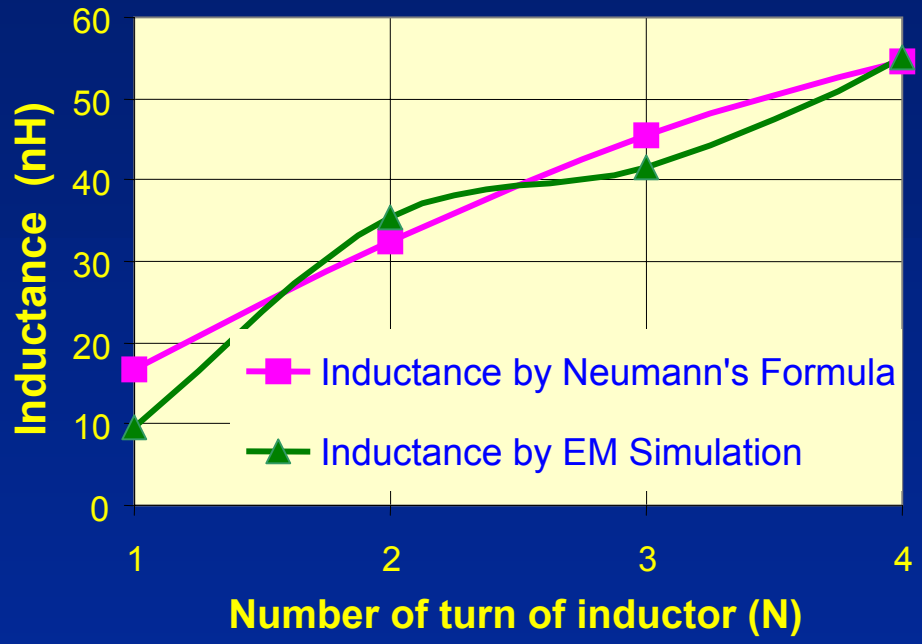

A 5-turn spiral inductor with
strip width = 0.2mm;
spacing = 0.2mm;
distance to ground = 1mm

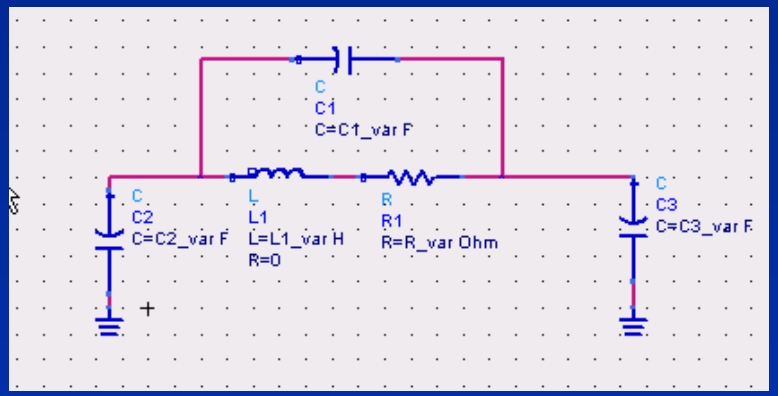

Knowledge for LTCC Design (cont.):

- Capacitance

For embedded capacitors, parallel plate capacitance formula serves well.

For a conducting patch located at the air-substrate interface and above ground

$$C = \varepsilon_0 \left[\left(\frac{\varepsilon_r A}{t} \right)^n + \left(\frac{(\varepsilon_r + 1)}{2} c_f \sqrt{8\pi A} \right)^n \right]^{\frac{1}{n}}$$

$c_f \approx 0.9$ for square and many common shapes, t is the thickness of the substrate and A is the area of the patch. It was claimed that when the make up exponent n=1.114, the maximum error of the formula can be reduced to 1%.

Dynamic Knowledge Model

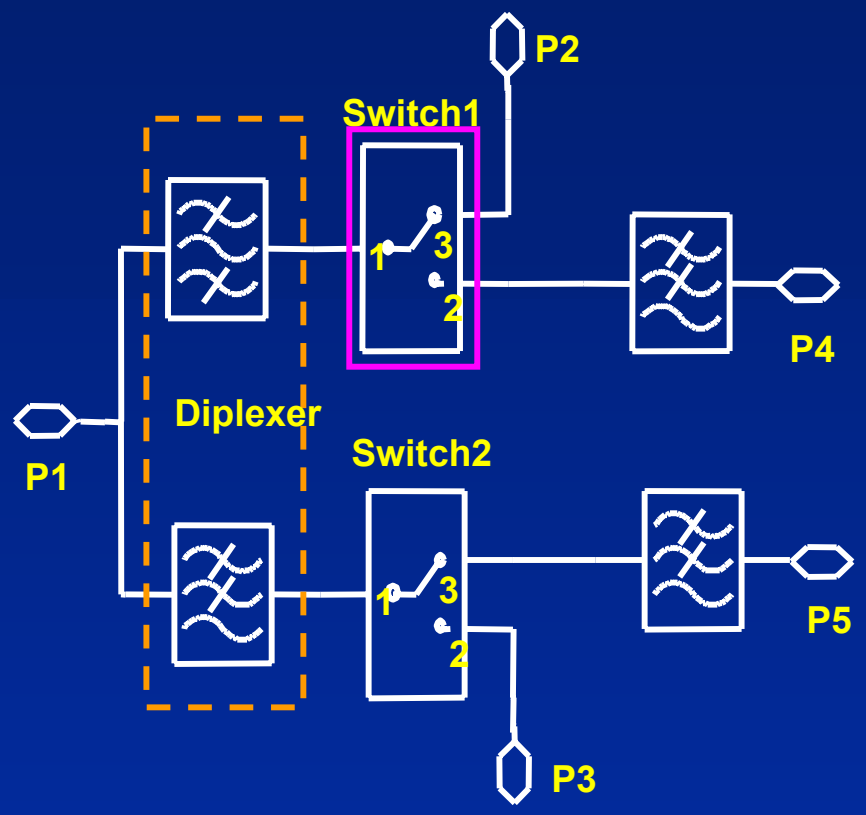

Schematic of Switch1

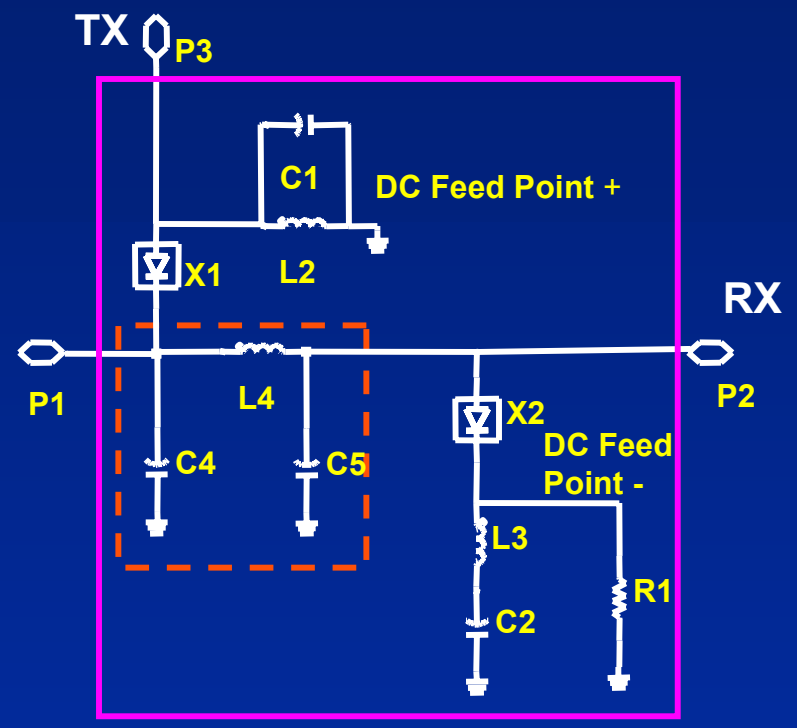

Antenna diplexer switch module for GSM phone

Dynamic Knowledge Model

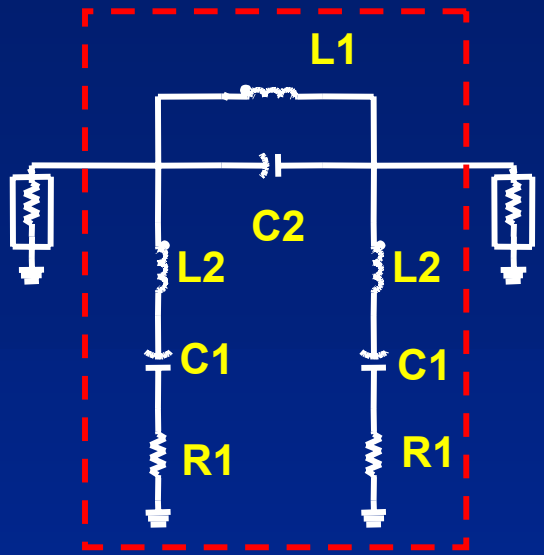

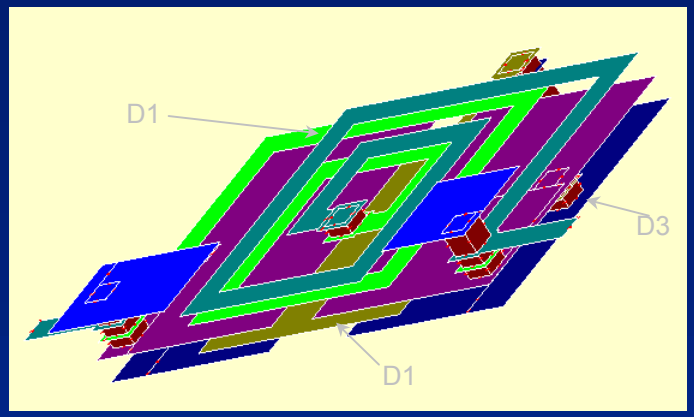

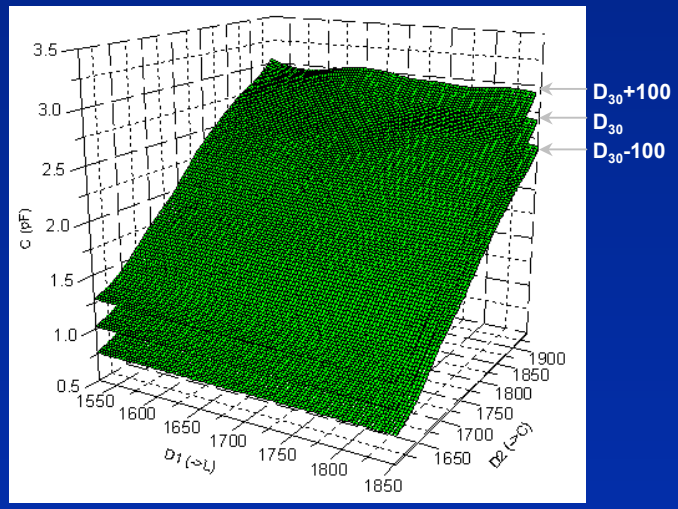

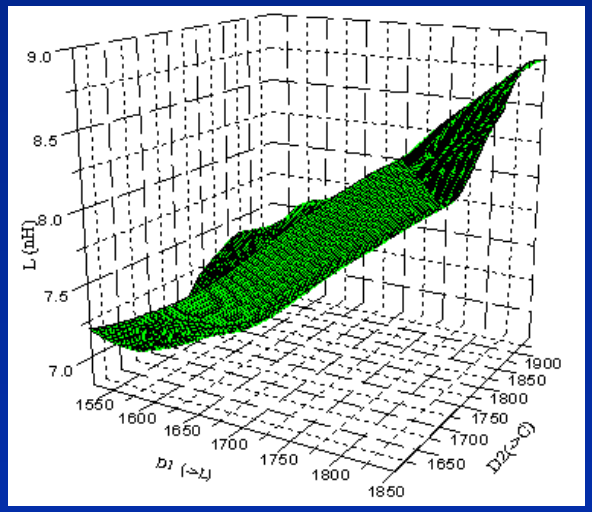

Dynamic Knowledge Model (cont.)

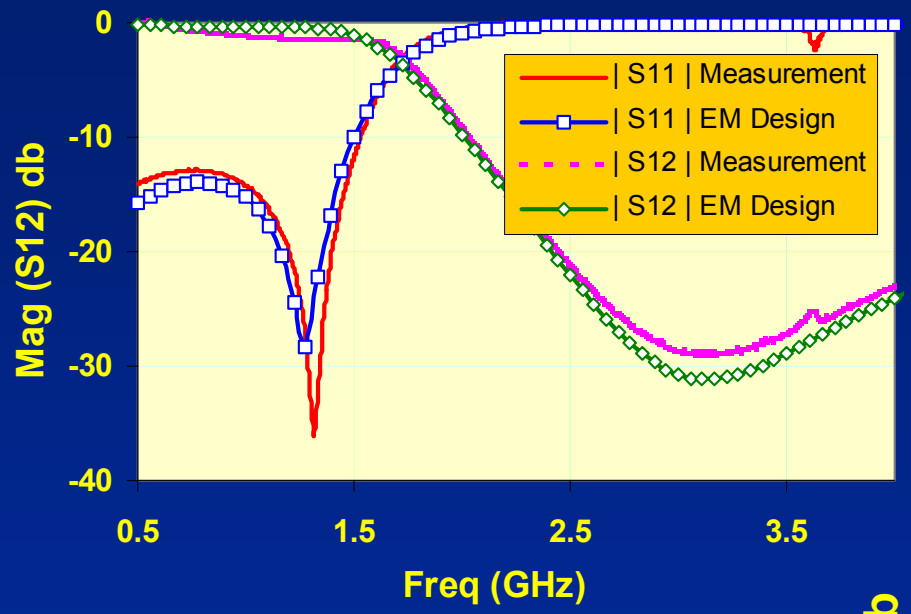

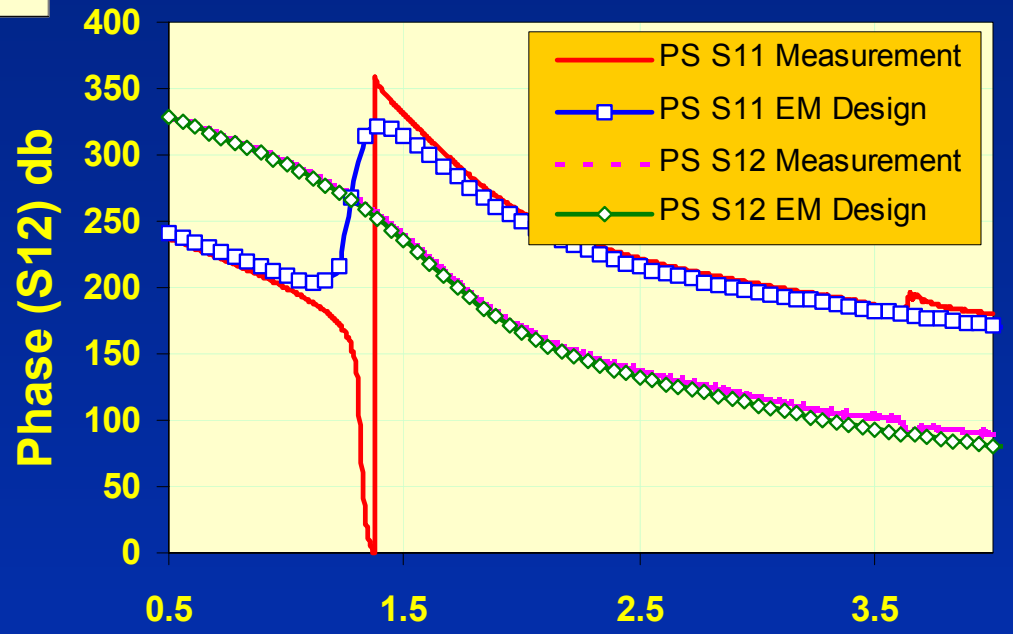

Design Example 1:

2.4GHz Filter Specs:

- Center Frequency: 2450MHz
- Bandwidth (3dB): 100MHz
- Insertion Loss: 2dB
- Attenuation: 40dB (1840–1940MHz)
- 35dB (2100MHz – 2200MHz)
- 30dB (4800MHz – 5000MHz)
- Impedance: 50 Ohms

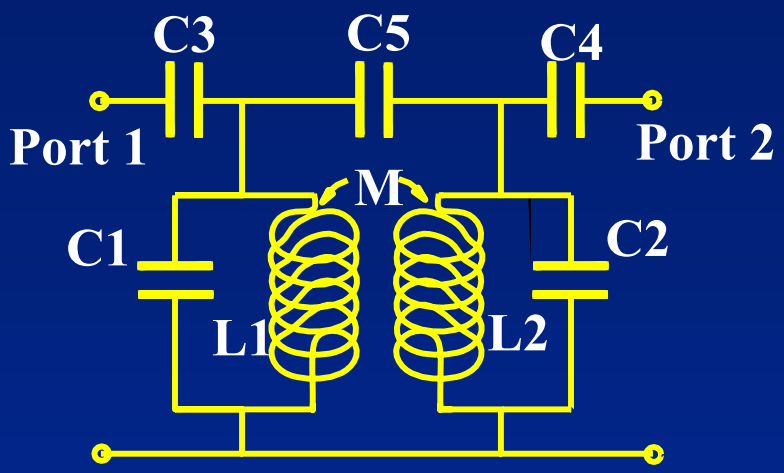

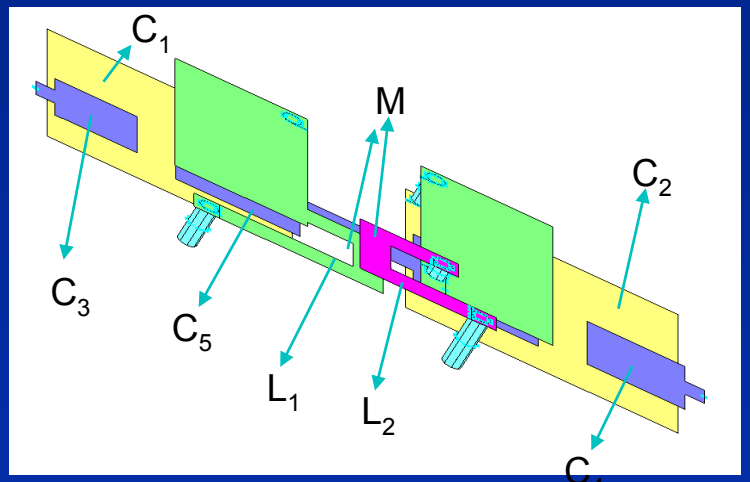

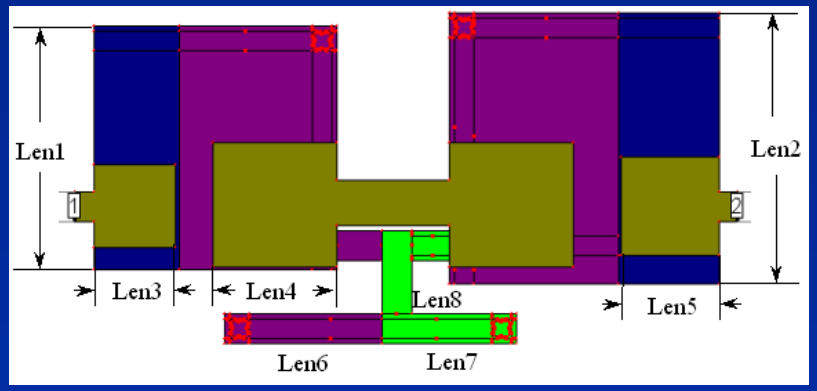

Design Example 1 (cont.):

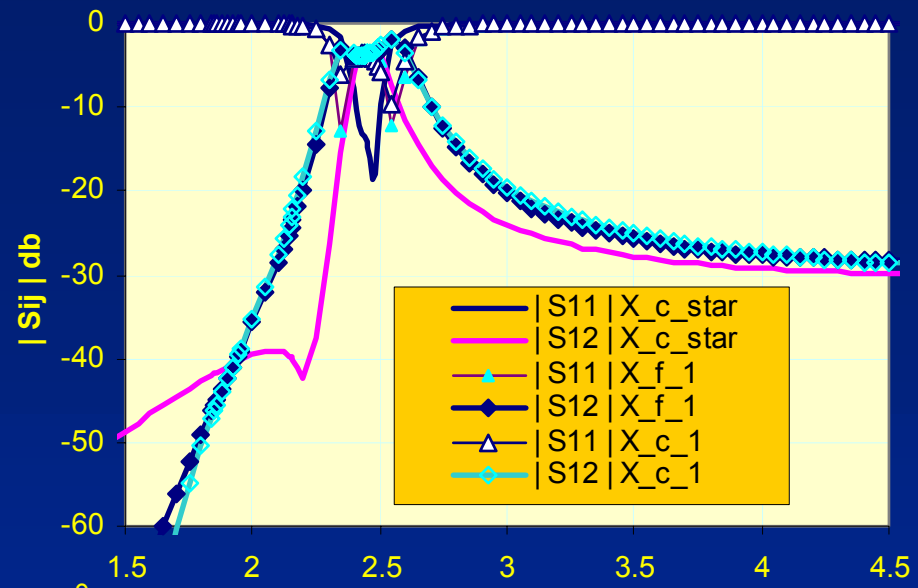

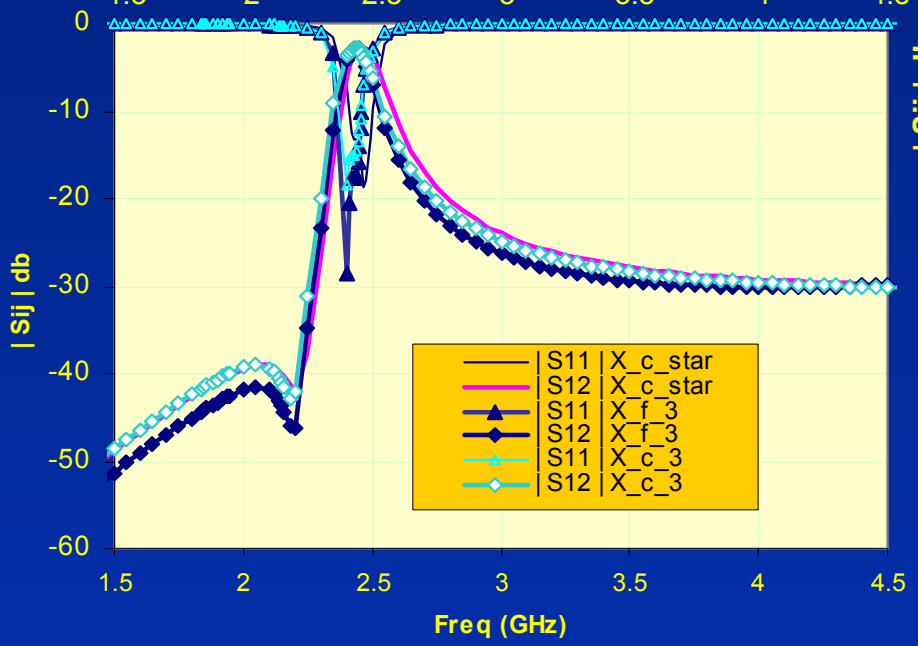

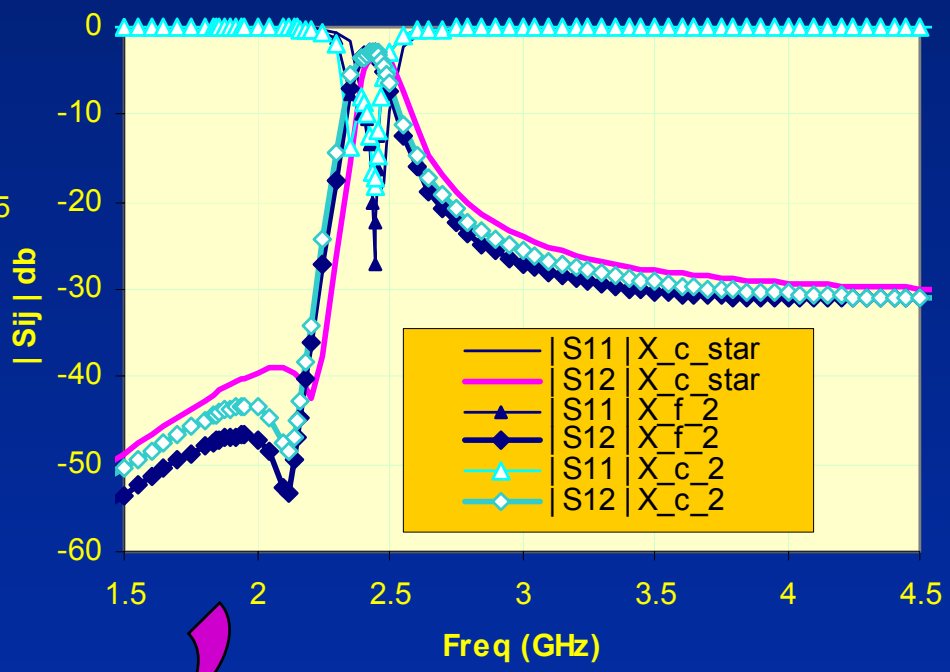

Design Example 1 (cont.):

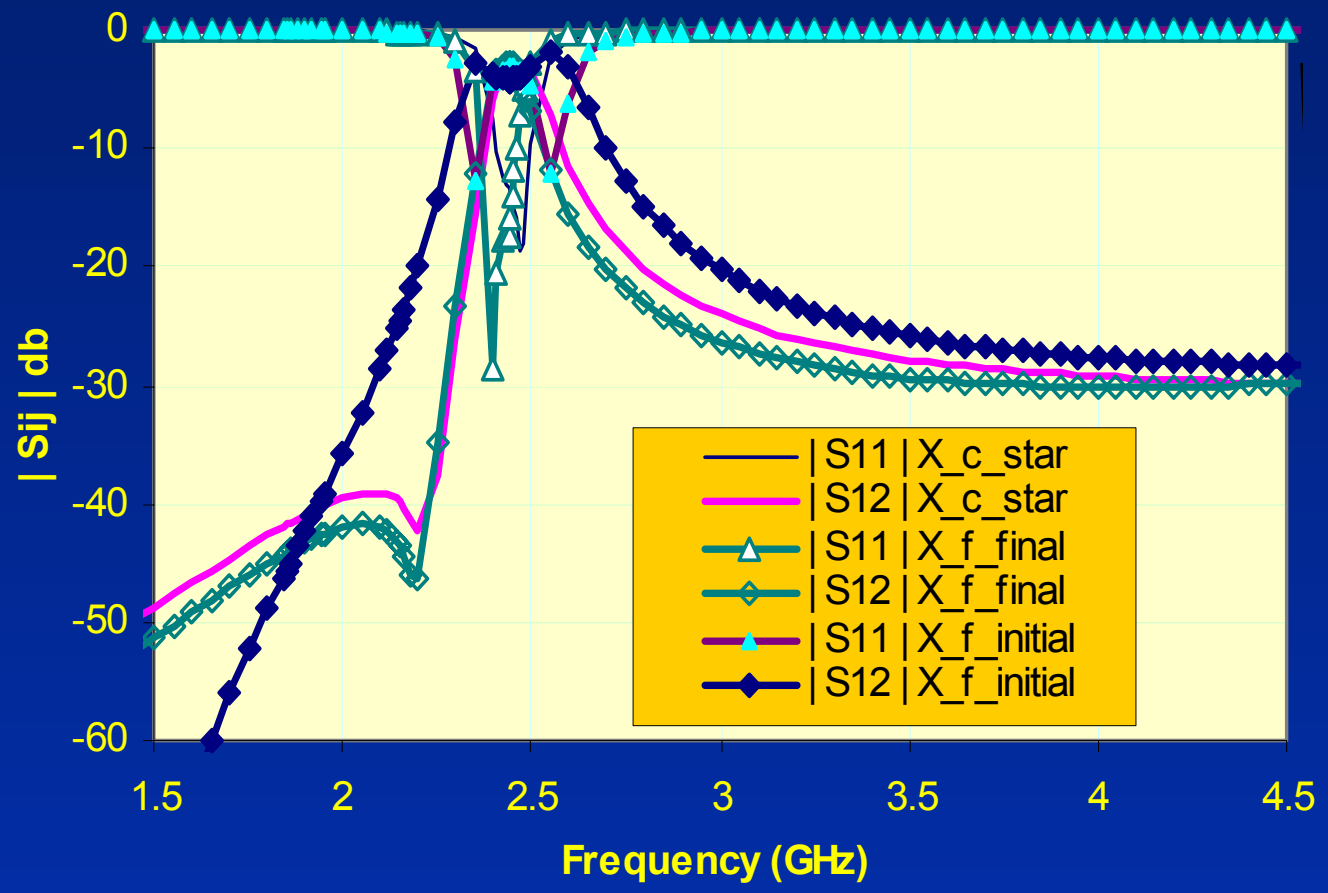

Design Example 2:

W-CDMA Filter Specs:

- Center Frequency: 2140MHz
- Bandwidth (3dB): 60MHz
- Insertion Loss: 3.7dB max.

Attenuation:

> 30dB (0.3MHz – 1920MHz)
> 30dB (1920MHz – 1980MHz)
> 30dB (2300MHz – 2360MHz)
> 35dB (2490MHz – 2550MHz)
> 30dB (2300MHz – 2360MHz)

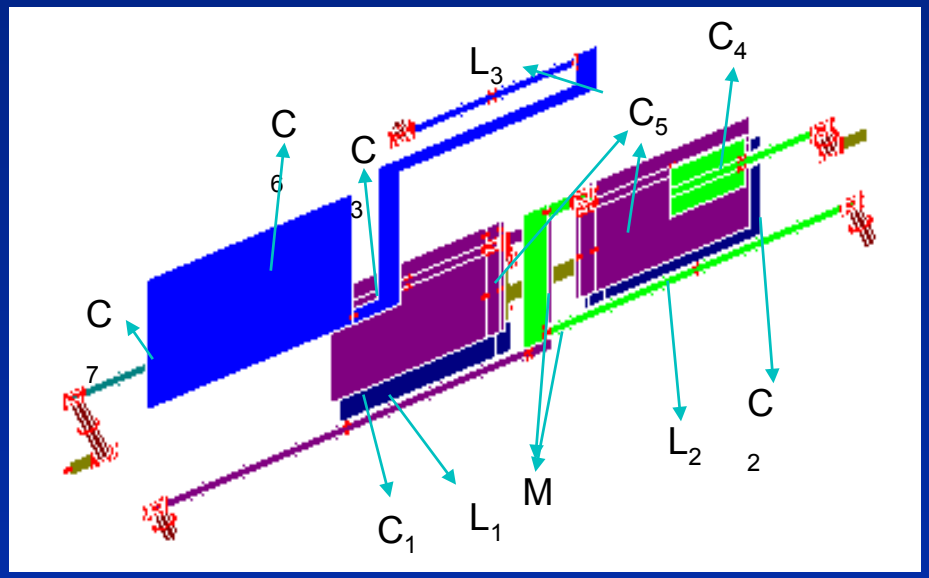

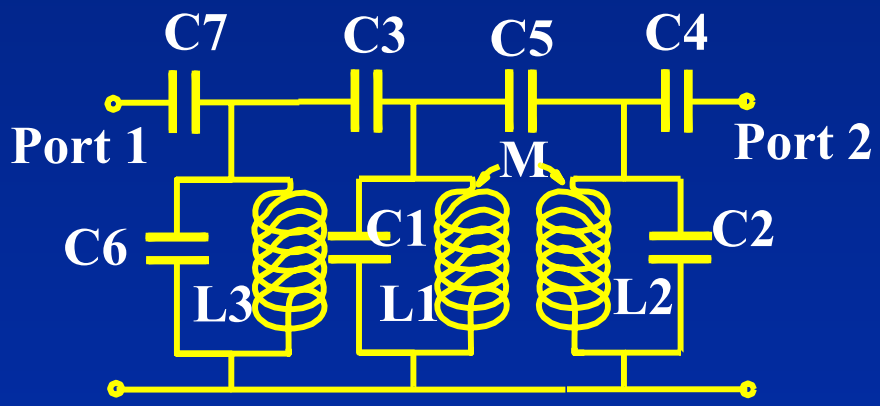

Design Example 2 (cont.):

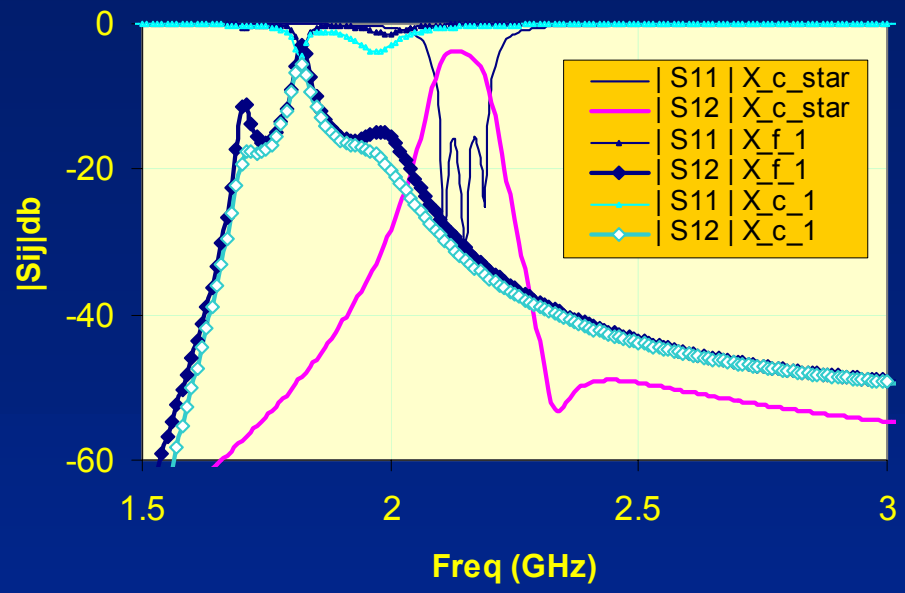

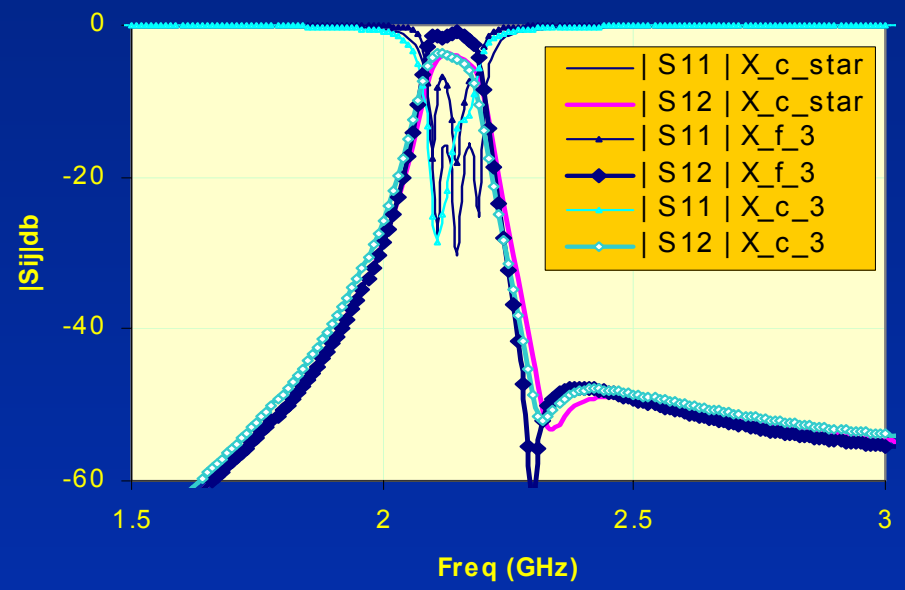

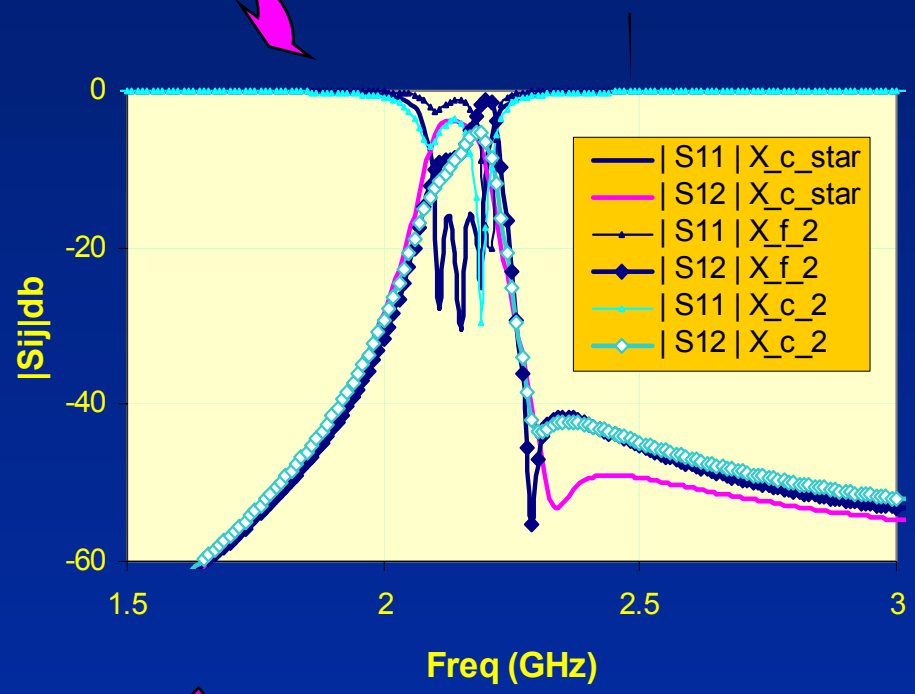

Design Example 2 (cont.):

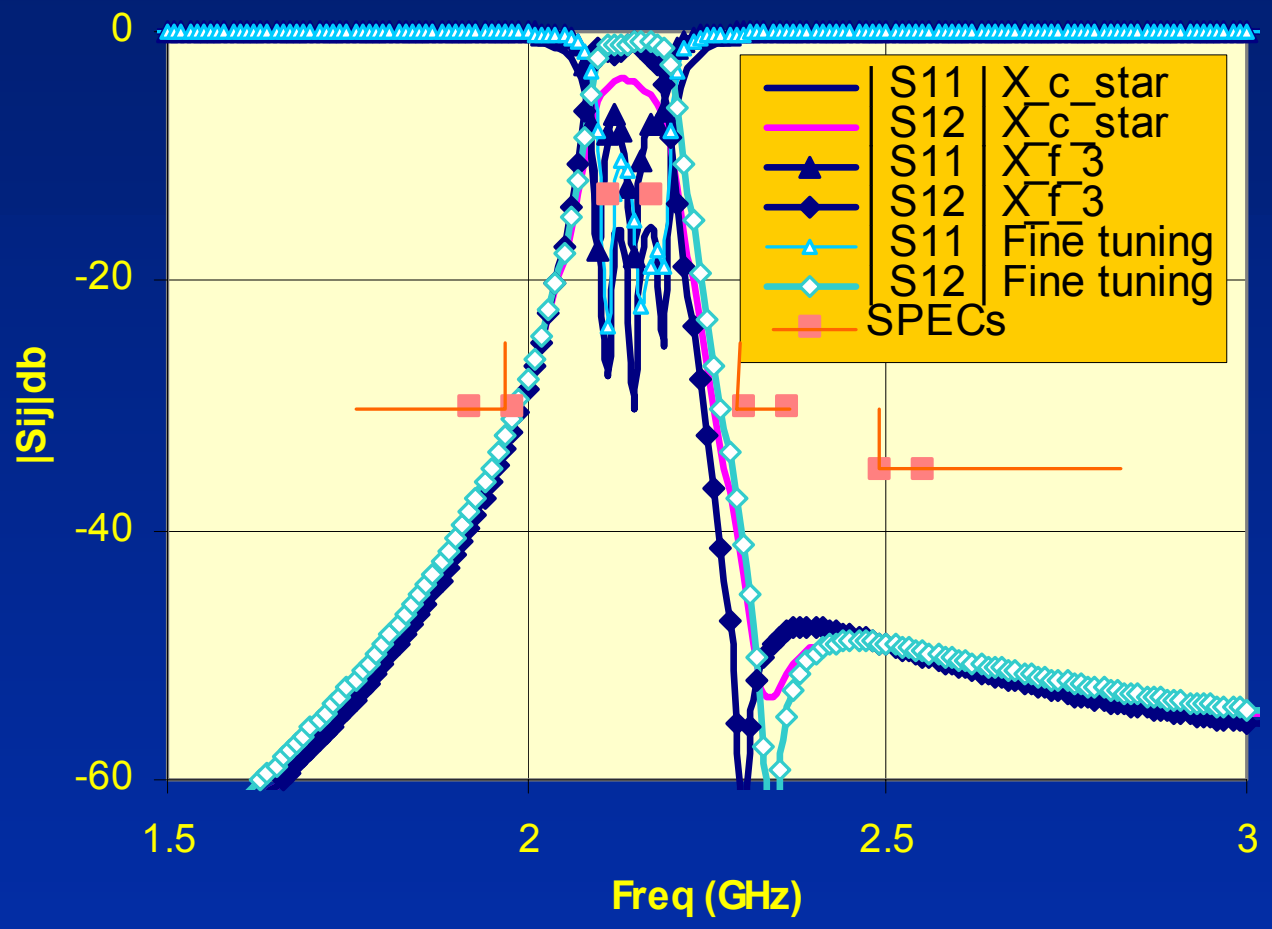

Conclusions:

- Explicit knowledge space makes SM technique more flexible to use and easier to understand
- The required knowledge for LTCC design can be in many different forms
- The key step in applying SM is to find a good coarse model that can well fit the fine model